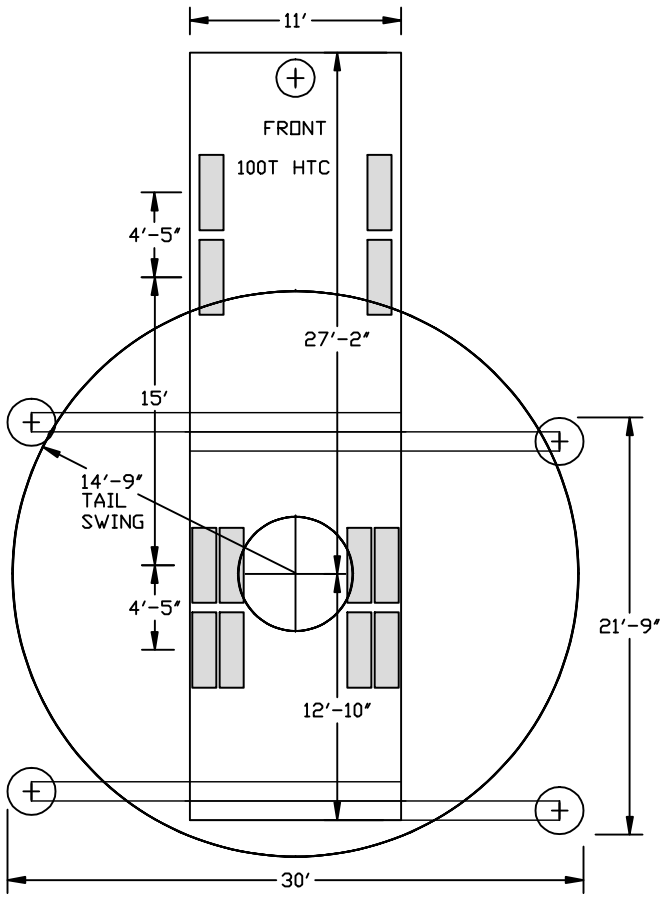

Montana Crane Service
209 East Cedar
Bozeman, MT 59715
Ph. (406) 586-0909 Fax 586-3836

AXLE WEIGHTS WITH BOOM		
	IN CRADLE	IN DOLLY
FRONT TANDEMS	40,900	36,800
REAR TANDOMS	72,300	53,500
BOOM DOLLY		38,700

TITLE		DWG NO.
LINK-BELT HTC 11-100		100TONHTC
MCS UNIT # 43	SCALE 1"/10'	DATE 06/02/06